40 CM ROUND BRASS VESSEL SINK

VESSEL · SOLID BRASS, 1.3 MM (16 GA) · HAND-ENGRAVED

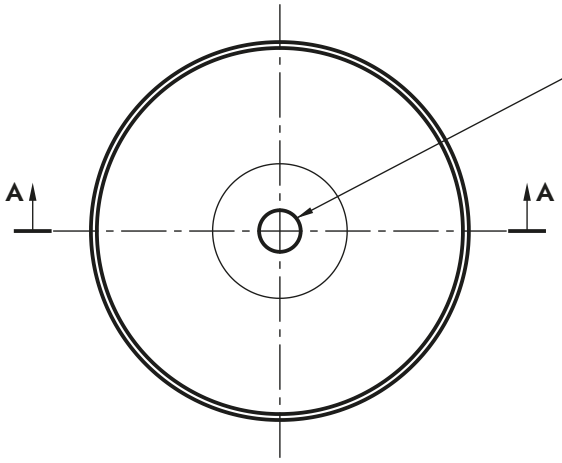

PLAN VIEW
SCALE 1:8

INSTALLATION
SCALE 1:1

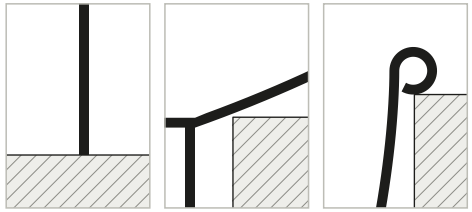

VESSEL
No cutout

PARTLY RECESSED
Ø155 [6 1/8″] OR LARGER

FULLY RECESSED
Ø394 [15 1/2″]

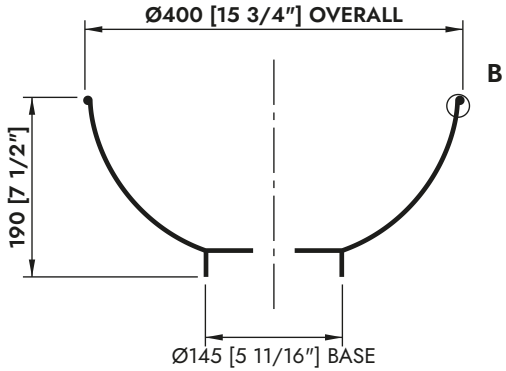

SECTION A-A
SCALE 1:8

Countertop (by others) shown hatched.

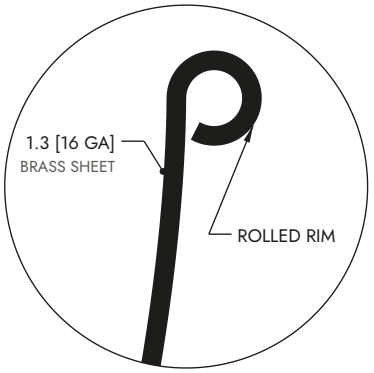

DETAIL B
SCALE 2:1

INSTALLATION DATA

Mounting	**Vessel, partly or fully recessed**
Overall diameter	**Ø400 [15 3/4″]**
Overall height	**190 [7 1/2″]**
Base diameter	**Ø145 [5 11/16″]**
Cutout, partly recessed	**Ø155 [6 1/8″] or larger**
Cutout, fully recessed	**Ø394 [15 1/2″]**
Drain opening	**Ø44 [1 3/4″], centered**
Drain supplied	**Matching drain basket only**
Drain body and tailpiece	**By others**
Rim	**Rolled**
Overflow	**None**
Construction	**Raised from one sheet, soldered foot**
Weight, sink only	**approx. 1.9 kg [4.2 lb]**
Capacity, filled to the rim	**13.4 L [3.5 US gal]**

FINISHES AND MODEL NUMBERS

SNK-RD-B-001-40	Polished
SNK-RD-B-002-40	Aged

All finishes are unlacquered.

NOTES

1. 40 cm is the nominal size: the overall Ø400 across the rim.
2. Partly recessed: a Ø155 cutout takes the base only. For a lower sink, cut to the bowl's outside diameter at the countertop surface (DXF).
3. Verify sink dimensions before cutting the countertop.
4. Countertop, mounting hardware, sealant and installation by others.
5. Do not scale the drawing. Scales apply to a Letter print at 100%. DXF CAD file available.

SPECIFICATION

Vessel bathroom sink: TerraFez 40 cm Hand-Engraved Round Brass Vessel Sink, model SNK-RD-B-00X-40. Bowl raised from one solid brass sheet, 1.3 mm (16 ga), not plated, hand-engraved, with a rolled rim and a soldered foot. Ø400 mm [15 3/4″] overall, 190 mm [7 1/2″] high, on a Ø145 mm [5 11/16″] round base. Ø44 mm [1 3/4″] drain opening, centered. No overflow. Matching drain basket included, drain body and tailpiece by others. Vessel, partly recessed or fully recessed. Finish: polished or aged, unlacquered.

TerraFez LLC
terrafez.com · contact@terrafez.com

TITLE	MODEL
40 CM ROUND BRASS VESSEL SINK	SNK-RD-B-00X-40

UNITS	SCALE	GENERAL TOLERANCE	PROJECTION
MM [IN]	AS NOTED	±5 [±3/16″]	

DATE	REV	STATUS	SHEET
2026-11-26	B	ISSUED	1 OF 1