35 CM ROUND BRASS VESSEL SINK

VESSEL · SOLID BRASS, 1.3 MM (16 GA) · HAND-ENGRAVED

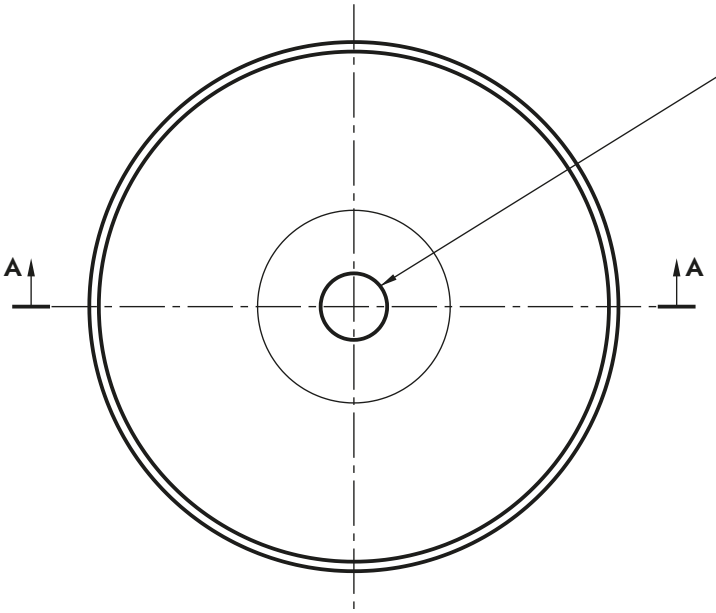

PLAN VIEW
SCALE 1:5

INSTALLATION
SCALE 1:1

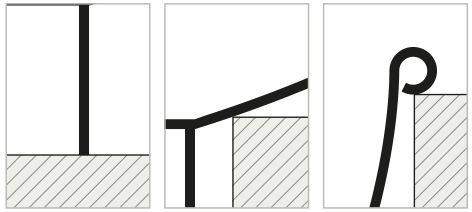

VESSEL
No cutout

PARTLY RECESSED
Ø140 [5 1/2″] OR LARGER

FULLY RECESSED
Ø344 [13 9/16″]

Countertop (by others) shown hatched.

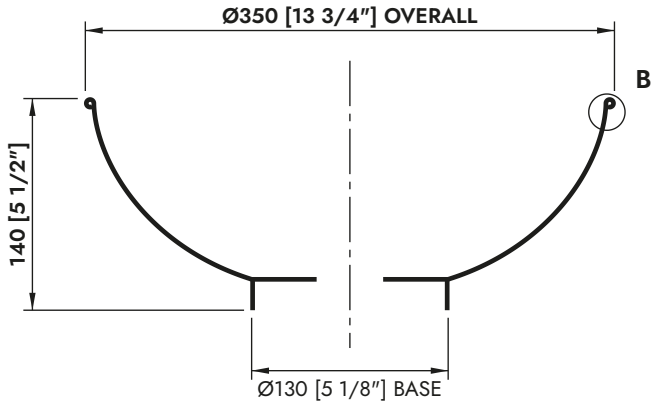

SECTION A-A
SCALE 1:5

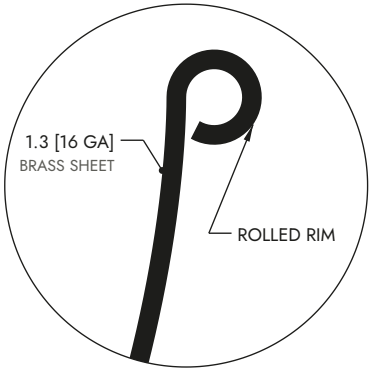

DETAIL B
SCALE 2:1

INSTALLATION DATA

Mounting	Vessel, partly or fully recessed
Overall diameter	**Ø350 [13 3/4″]**
Overall height	**140 [5 1/2″]**
Base diameter	Ø130 [5 1/8″]
Cutout, partly recessed	Ø140 [5 1/2″] or larger
Cutout, fully recessed	Ø344 [13 9/16″]
Drain opening	Ø44 [1 3/4″], centered
Drain supplied	Matching drain basket only
Drain body and tailpiece	By others
Rim	Rolled
Overflow	None
Construction	Raised from one sheet, soldered foot
Weight, sink only	approx. 1.3 kg [2.9 lb]
Capacity, filled to the rim	7.5 L [2.0 US gal]

FINISHES AND MODEL NUMBERS

SNK-RD-B-001-35	Polished
SNK-RD-B-002-35	Aged

All finishes are unlacquered.

NOTES

1. 35 cm is the nominal size: the overall Ø350 across the rim.
2. Partly recessed: a Ø140 cutout takes the base only. For a lower sink, cut to the bowl's outside diameter at the countertop surface (DXF).
3. Verify sink dimensions before cutting the countertop.
4. Countertop, mounting hardware, sealant and installation by others.
5. Do not scale the drawing. Scales apply to a Letter print at 100%. DXF CAD file available.

SPECIFICATION

Vessel bathroom sink: TerraFez 35 cm Hand-Engraved Round Brass Vessel Sink, model SNK-RD-B-00X-35. Bowl raised from one solid brass sheet, 1.3 mm (16 ga), not plated, hand-engraved, with a rolled rim and a soldered foot. Ø350 mm [13 3/4″] overall, 140 mm [5 1/2″] high, on a Ø130 mm [5 1/8″] round base. Ø44 mm [1 3/4″] drain opening, centered. No overflow. Matching drain basket included, drain body and tailpiece by others. Vessel, partly recessed or fully recessed. Finish: polished or aged, unlacquered.

TerraFez LLC
terrafez.com · contact@terrafez.com

TITLE	MODEL
35 CM ROUND BRASS VESSEL SINK	SNK-RD-B-00X-35

UNITS	SCALE	GENERAL TOLERANCE	PROJECTION
MM [IN]	AS NOTED	±5 [±3/16″]	

DATE	REV	STATUS	SHEET
2026-11-25	A	ISSUED	1 OF 1