30 CM ROUND BRASS VESSEL SINK

VESSEL · SOLID BRASS, 1.3 MM (16 GA) · HAND-ENGRAVED

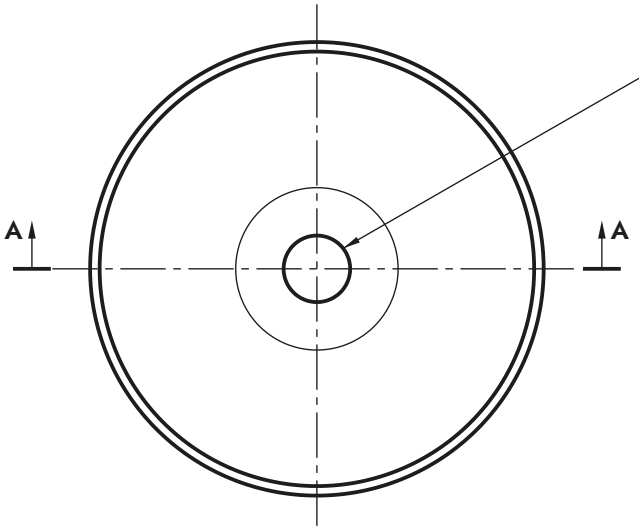

PLAN VIEW
SCALE 1:5

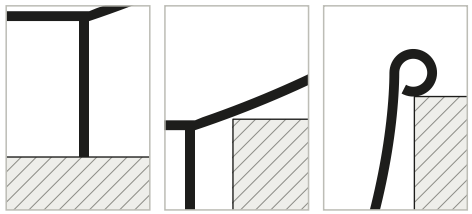

INSTALLATION
SCALE 1:1

VESSEL	PARTLY RECESSED	FULLY RECESSED
No cutout	Ø120 [4 3/4″] OR LARGER	Ø294 [11 9/16″]

Countertop (by others) shown hatched.

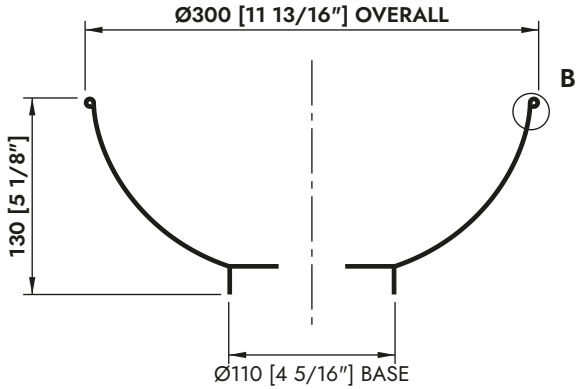

SECTION A-A
SCALE 1:5

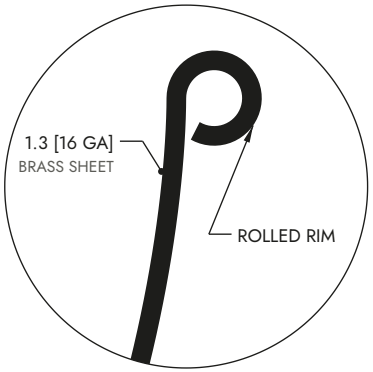

DETAIL B
SCALE 2:1

INSTALLATION DATA

Mounting	**Vessel, partly or fully recessed**
Overall diameter	**Ø300 [11 13/16″]**
Overall height	**130 [5 1/8″]**
Base diameter	**Ø110 [4 5/16″]**
Cutout, partly recessed	**Ø120 [4 3/4″] or larger**
Cutout, fully recessed	**Ø294 [11 9/16″]**
Drain opening	**Ø44 [1 3/4″], centered**
Drain supplied	**Matching drain basket only**
Drain body and tailpiece	**By others**
Rim	**Rolled**
Overflow	**None**
Construction	**Raised from one sheet, soldered foot**
Weight, sink only	**approx. 1.0 kg [2.2 lb]**
Capacity, filled to the rim	**5.1 L [1.3 US gal]**

FINISHES AND MODEL NUMBERS

SNK-RD-B-001-30	Polished
SNK-RD-B-002-30	Aged

All finishes are unlacquered.

NOTES

1. 30 cm is the nominal size: the overall Ø300 across the rim.
2. Partly recessed: a Ø120 cutout takes the base only. For a lower sink, cut to the bowl's outside diameter at the countertop surface (DXF).
3. Verify sink dimensions before cutting the countertop.
4. Countertop, mounting hardware, sealant and installation by others.
5. Do not scale the drawing. Scales apply to a Letter print at 100%. DXF CAD file available.

SPECIFICATION

Vessel bathroom sink: TerraFez 30 cm Hand-Engraved Round Brass Vessel Sink, model SNK-RD-B-00X-30. Bowl raised from one solid brass sheet, 1.3 mm (16 ga), not plated, hand-engraved, with a rolled rim and a soldered foot. Ø300 mm [11 13/16″] overall, 130 mm [5 1/8″] high, on a Ø110 mm [4 5/16″] round base. Ø44 mm [1 3/4″] drain opening, centered. No overflow. Matching drain basket included, drain body and tailpiece by others. Vessel, partly recessed or fully recessed. Finish: polished or aged, unlacquered.

TerraFez LLC
terrafez.com · contact@terrafez.com

TITLE	MODEL
30 CM ROUND BRASS VESSEL SINK	SNK-RD-B-00X-30

UNITS	SCALE	GENERAL TOLERANCE	PROJECTION
MM [IN]	AS NOTED	±5 [±3/16″]	

DATE	REV	STATUS	SHEET
2026-11-25	A	ISSUED	1 OF 1