17″ OVAL BRASS SINK

UNDERMOUNT · SOLID BRASS, 1.3 MM (16 GA) · SEAMLESS

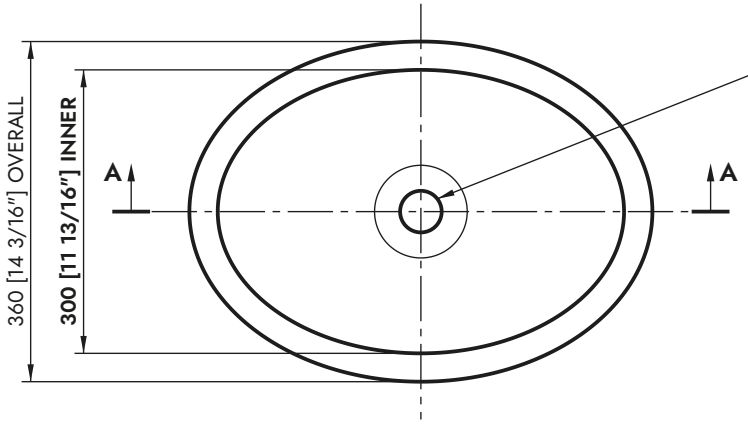

PLAN VIEW
SCALE 1:8

COUNTERTOP CUTOUT
SCALE 1:1

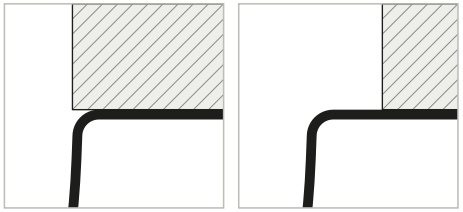

FLUSH
430 × 300
[16 15/16″ × 11 13/16″]

WITH REVEAL
up to 450 × 320
[17 11/16″ × 12 5/8″]
reveal up to 10 [3/8″] each side

Countertop (by others) shown hatched.

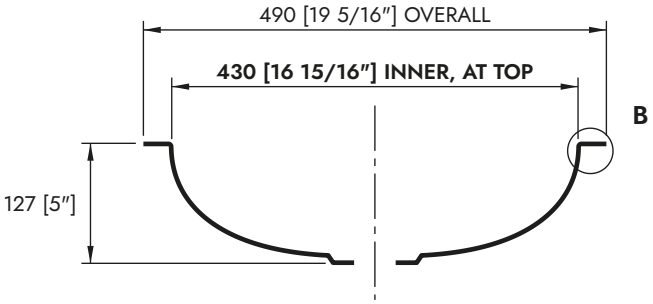

SECTION A-A
SCALE 1:8

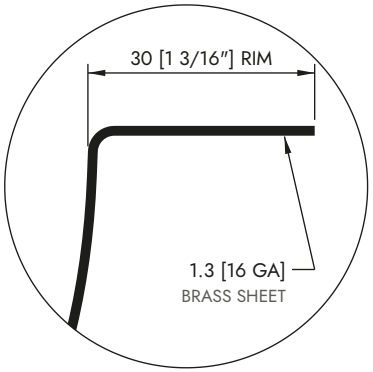

DETAIL B
SCALE 1:1

INSTALLATION DATA

Mounting	**Undermount; drop-in possible**
Countertop cutout, flush	**430 × 300 [16 15/16″ × 11 13/16″]**
Cutout, reveal or drop-in	**up to 450 × 320 [17 11/16″ × 12 5/8″]**
Min. cabinet interior width	**510 [20 1/8″]**
Drain opening	**Ø44 [1 3/4″], centered**
Drain supplied	**Matching drain basket only**
Drain body and tailpiece	**By others**
Overflow	**None**
Mounting hardware	**Not included**
Weight, sink only	**approx. 1.7 kg [3.7 lb]**
Capacity, filled to the rim	**9 L [2.4 US gal]**

FINISHES AND MODEL NUMBERS

SNK-B-OV-001-17	Hammered
SNK-B-OV-002-17	Aged hammered

All finishes are unlacquered.

NOTES

1. 17″ is the nominal size. Use the inner 430 × 300 for the cutout.
2. Verify sink dimensions before cutting the countertop.
3. Countertop, mounting hardware, sealant and installation by others.
4. Do not scale the drawing. Scales apply to a Letter print at 100%. DXF CAD file available.

SPECIFICATION

Undermount bathroom sink: TerraFez 17″ Oval Brass Sink, model SNK-B-OV-00X-17. Solid brass sheet, 1.3 mm (16 ga), seamless, not plated. Inner 430 × 300 mm [16 15/16″ × 11 13/16″] at top, 127 mm [5″] high, 30 mm [1 3/16″] flat mounting rim, Ø44 mm [1 3/4″] drain opening, centered. No overflow. Matching drain basket included, drain body and tailpiece by others. Finish: hammered or aged hammered, unlacquered.

TerraFez LLC
terrafez.com · contact@terrafez.com

TITLE	MODEL
17″ OVAL BRASS SINK	SNK-B-OV-00X-17

UNITS	SCALE	GENERAL TOLERANCE	PROJECTION
MM [IN]	AS NOTED	±5 [±3/16″]	

DATE	REV	STATUS	SHEET
2026-11-24	A	ISSUED	1 OF 1