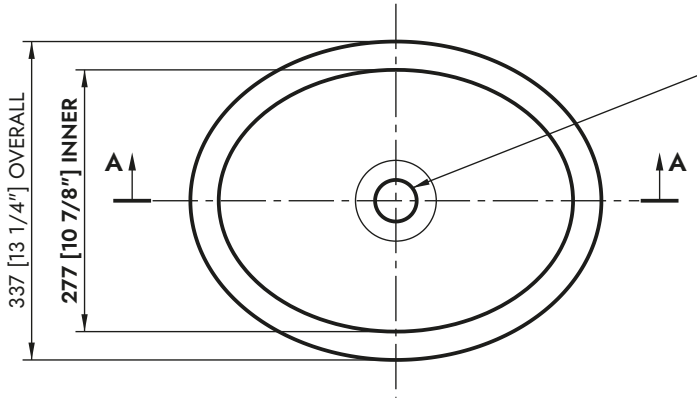

PLAN VIEW
SCALE 1:8

COUNTERTOP CUTOUT
SCALE 1:1

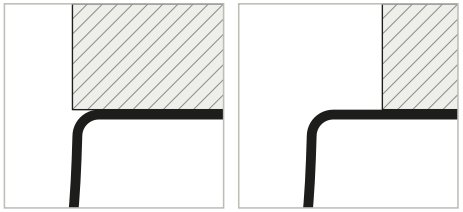

FLUSH
375 × 277
[14 3/4″ × 10 7/8″]

WITH REVEAL
up to 395 × 297
[15 9/16″ × 11 11/16″]
reveal up to 10 [3/8″] each side

Countertop (by others) shown hatched.

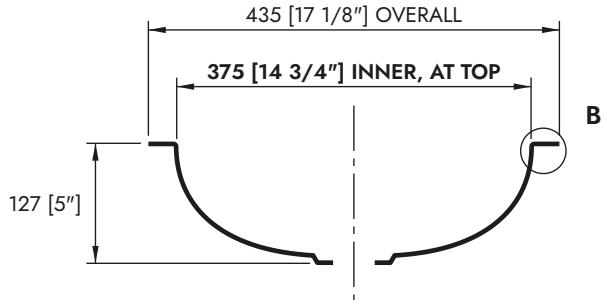

SECTION A-A
SCALE 1:8

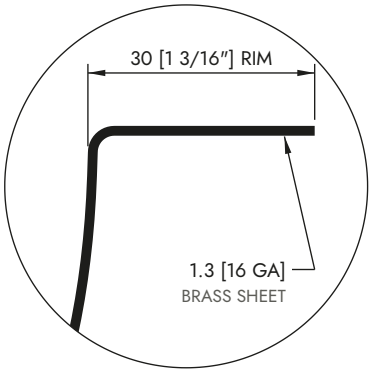

DETAIL B
SCALE 1:1

15″ OVAL BRASS SINK

UNDERMOUNT · SOLID BRASS, 1.3 MM (16 GA) · SEAMLESS

INSTALLATION DATA

Mounting	**Undermount; drop-in possible**
Countertop cutout, flush	**375 × 277 [14 3/4″ × 10 7/8″]**
Cutout, reveal or drop-in	**up to 395 × 297 [15 9/16″ × 11 11/16″]**
Min. cabinet interior width	**455 [17 15/16″]**
Drain opening	**Ø44 [1 3/4″], centered**
Drain supplied	**Matching drain basket only**
Drain body and tailpiece	**By others**
Overflow	**None**
Mounting hardware	**Not included**
Weight, sink only	**approx. 1.4 kg [3.2 lb]**
Capacity, filled to the rim	**7 L [1.9 US gal]**

FINISHES AND MODEL NUMBERS

SNK-B-OV-001-15	Hammered
SNK-B-OV-002-15	Aged hammered

All finishes are unlacquered.

NOTES

1. 15″ is the nominal size. Use the inner 375 × 277 for the cutout.
2. Verify sink dimensions before cutting the countertop.
3. Countertop, mounting hardware, sealant and installation by others.
4. Do not scale the drawing. Scales apply to a Letter print at 100%. DXF CAD file available.

SPECIFICATION

Undermount bathroom sink: TerraFez 15″ Oval Brass Sink, model SNK-B-OV-00X-15. Solid brass sheet, 1.3 mm (16 ga), seamless, not plated. Inner 375 × 277 mm [14 3/4″ × 10 7/8″] at top, 127 mm [5″] high, 30 mm [1 3/16″] flat mounting rim, Ø44 mm [1 3/4″] drain opening, centered. No overflow. Matching drain basket included, drain body and tailpiece by others. Finish: hammered or aged hammered, unlacquered.

TerraFez LLC
terrafez.com · contact@terrafez.com

TITLE	MODEL
15″ OVAL BRASS SINK	SNK-B-OV-00X-15

UNITS	SCALE	GENERAL TOLERANCE	PROJECTION
MM [IN]	AS NOTED	±5 [±3/16″]	

DATE	REV	STATUS	SHEET
2026-11-24	B	ISSUED	1 OF 1